正式图	参考图	CUSTOMER DRAWING
		ROHS2 / Halogen free

Mark	ECN NO.	DESCRIPTION	DESIGN	Date:
——	——	NEW VERSION	Carlyle Xu	2017.06.09
A1	EN20170717001	Modify the part structure	David Zhou	2017.07.17
A2	EN20170726002	Modify the part structure	David Zhou	2017.07.26

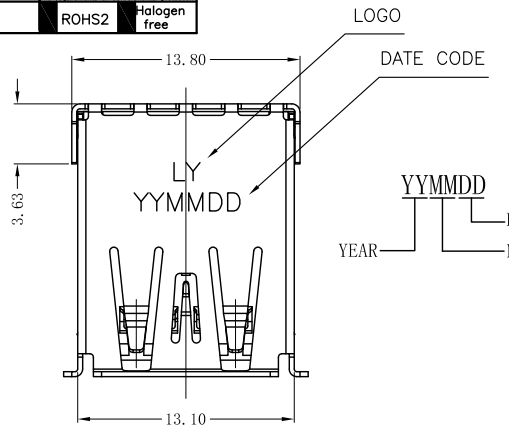

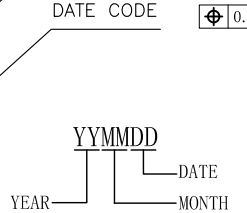

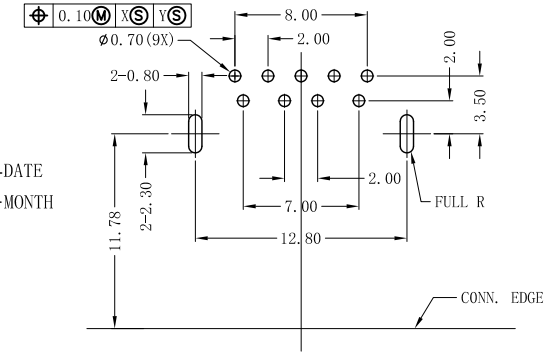

RECOMMENDED PCB LAYOUT (TOP VIEW)

GENERAL TOLERANCES:±0.03 (t=1.6)

NOTES:
1.Rating: DC30V 1.8A;
2.Contact Resistance:≤30Milliohm;
3.Insulation Resistance:≥100Megohm;
4.Withstand Voltage:AC500V for one minute;
5.MATING FORCE:35 N Max
UNMATED FORCE:10 N Min INITIAL; 8 N Min AFTER TEST
6.Life test:5000Cycles.
7.Operating Temperature:-25°C~+70°C 85%RH Max;
8.Storage Temperature:-40°C~+85°C 85%RH Max.
9.Wave Solder 260°C,3~5 Seconds
IR Reflow, Peak Temp 230~240°C,20~40SEC.

	NO.	CODE	MATERIAL	REMARK
A1	3			
	2	L1	PA9T 30%G/FUL94V-0	RoHS2+H.F Fit (IR Reflow)
	1	L0	PA9T 30%G/FUL94V-0	RoHS2 Fit (IR Reflow)

TABLE A : Plastical Material

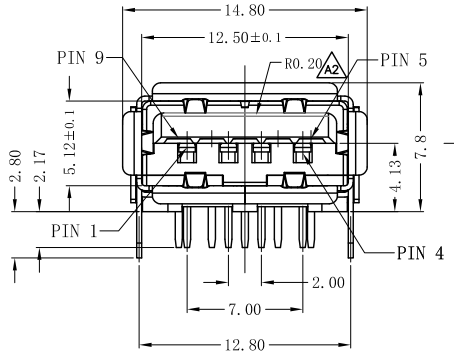

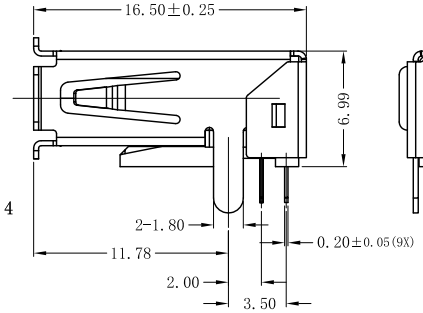

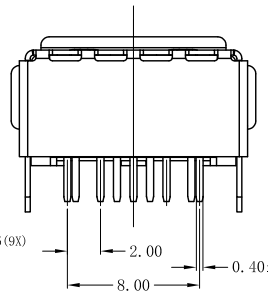

P/N: UB1147A-XXXX-XXXXXXX

Model P/N

Plastical Material (Choose From Table A)

Housing Color
- ☐01:Black
- ☐40:Blue300C
- ☐69:Blue306U
- ☐23:Blue285C

Typ
30:usb3.0-A;

Product salt mist
- ☐A:Normal(8 Hours);
- ☐B:24Hours;
- ☐C:48Hours;

Plating Code A2
- ☐A:CONTACT AREA:1U"GOLD,SOLDER AREA:MATTE TIN80U"
- ☐B:CONTACT AREA:3U"GOLD,SOLDER AREA:MATTE TIN80U"
- ☐C:CONTACT AREA:5U"GOLD,SOLDER AREA:MATTE TIN80U"
- ☐E:CONTACT AREA:15U"GOLD,SOLDER AREA:MATTE TIN80U"
- ☐G:CONTACT AREA:30U"GOLD,SOLDER AREA:MATTE TIN80U"

Shell Material
- ☐S: SUS 304

Remark
0:Normal;

Packing
☐B:Tray; ☐R:Tape reel;

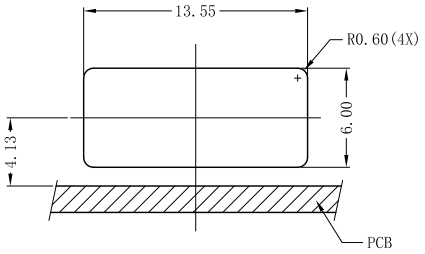

PANEL CUTOUT

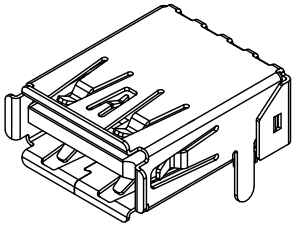

Contact Number	Signal Name
PIN1	VBUS
PIN2	D-
PIN3	D+
PIN4	GND
PIN5	StdA_SSRX-
PIN6	StdA_SSRX+
PIN7	GND_DRAIN
PIN8	StdA_SSTX-
PIN9	StdA_SSTX+
Shell	Shield

NO.	DESCRIPTION	QTY	PARTS MATERIAL	PLATING OR COLOR	REMARK
5					
4	SHIELD	1	SUS	50u"MIN.NICEL ALL OVER	T=0.3
3	TERMINAL	5	Copper Alloy	50u" MIN NICKEL ALL OVER 80u"MIN Tin ON SOLDER AREA (1~30)u"Au ON CONTACT AREA	X
2	TERMINAL	4	Copper Alloy		X
1	HOUSING	1	Choose from P/N	Choose from P/N item color	X

Tolerance	
X.X	±0.30
X.XX	±0.20
X.XXX	±0.10
Angle	±3.0°

UNIT:mm

MODEL NAME: USB 3.0 AF 90度有卷邊DIP

MODEL No: UB1147A-XXXX-XXXXXXX

SCALE:1:1 | REVISION A2 | SHEET 1/1

菱揚精密有限公司
Ling Yang Precision Co.,Ltd

DRAWING: Carlyle Xu
CHECKED: David Zhou
APPROVED: Jacky Lee
DATE: 2017.06.09
FILE: CD/LINGYANG
DWG NO.UB1147A-A001